Truck Parts & Solution

38ZY0023

6860/875 NTS2 Dual-Armrest LHD Driver Seat

Truck Driver Seat



Key Features / KEY FEATURES

- **Ergonomic Comfort**
- **Air Suspension**
- **Multi-Adjustable**
- **Safety Support**

Basic Information

BASIC INFORMATION

Product No.	38ZY0023	Seat Net Weight	36KGS
Product Name	6860/875 NTS2 Dual-Armrest LHD Driver Seat	Compatible Models	Mercedes-Benz ACTROS / Mercedes-Benz AXOR

38ZY0023

Truck Parts & Solution

Dimensions and Drawings

6860/875 NTS2 Dual-Armrest LHD Driver Seat



Front View

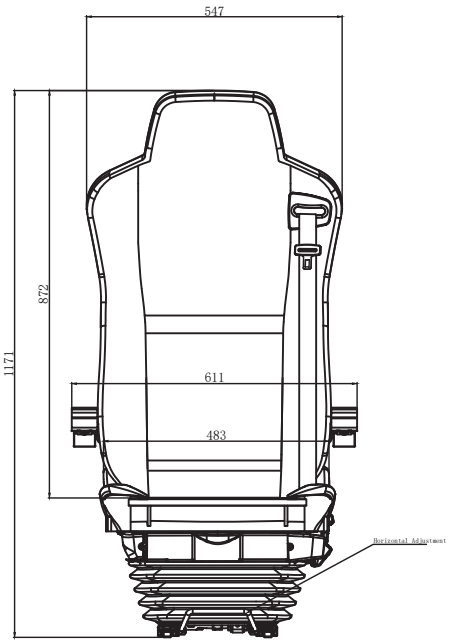

547

SIDE VIEW

Side View

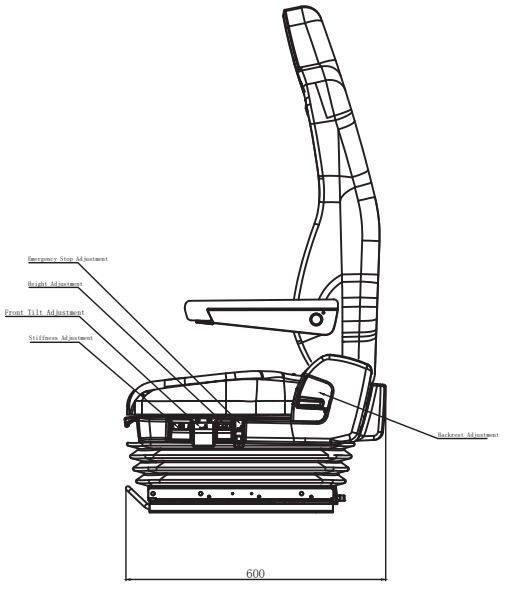

600

38ZY0023

Relerneec
Truck Parts & Solution

Control Functions



Control Functions / CONTROL FUNCTIONS

1 Damping Adjustment

2 Tilt Angle Adjustment

3 Height Adjustment

4 Fast-Release Valve

5 Backrest Adjustment

6 Seat Cushion Slide Adjustment

Seat Advantages

PRODUCT ADVANTAGES

01

Comfortable and Supportive

Ergonomic design follows the body's contours,providing excellent comfort and support.



02

Durable, breathable, and easy to clean,

EN 45545 Fire Safety

Made with high-quality, durable, breathable fabric,easy to clean and compliant with the EN 45545 fire-safety standard.



03

Adjustable Height and Angle

Seat height, cushion angle, and backrest angle with multi-directional adjustment.

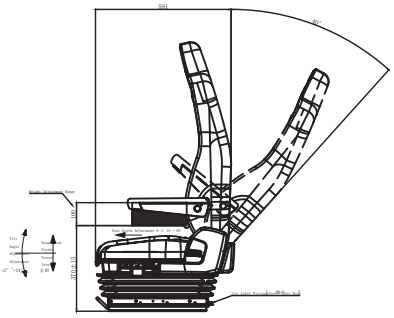

04

Integrated Three-Point Safety Belt

(height adjustable)

Integrated three-point safety belt, with height adjustment.



05

Supports 50–130 kg driver weights

Robust structural design, supporting 50–130 kg, suitable for different body types.



06

Equipped with 80–100 mm

Air-Suspension Cushioning

Equipped with an air-suspension cushioning sy
effectively filters road vibrations.



Packaging Information

PACKAGING

Method 1 Carton + Pallet



Seat: 36 kg

Outer Carton: 4 kg

Pallet: 8 kg

Dimensions: 130 × 60 × 70 cm

Method 2 L-Shaped Carton



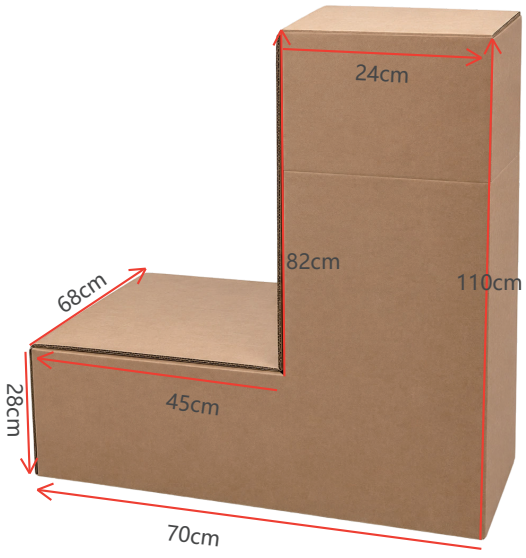

L-Shaped Carton: 3.5 kg Seat: 36 kg

Installation Instructions

INSTALLATION

1 Locate the Mounting Bracket

Locate the seat mounting bracket
in the truck cab at the red-marked position.

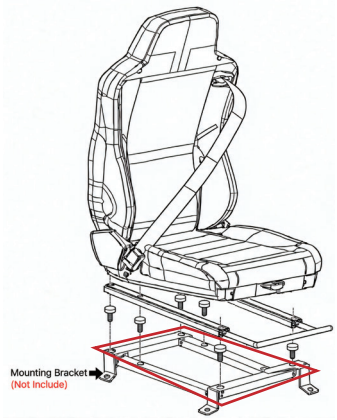

2 Measure Mounting Hole Spacing

Measure the spacing between
the six mounting holes.

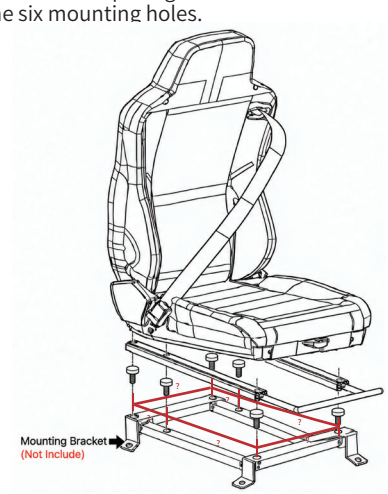

3 Check Mounting Dimensions

Confirm that the bracket dimensions
match model 38ZY0023.
Red marks indicate the screw holes.

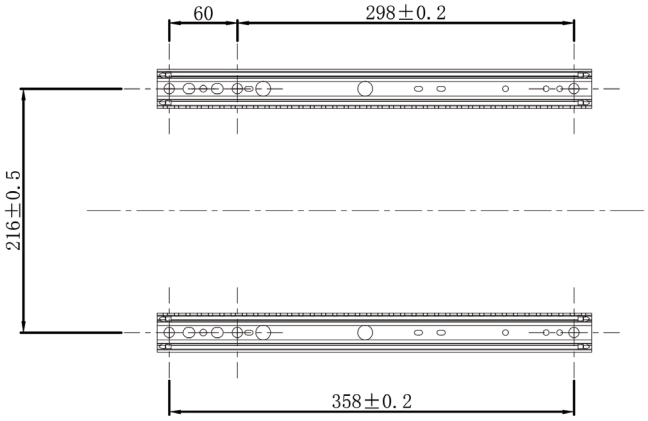

4 Secure with Original Vehicle Screws

Use the six original vehicle screws
to complete the installation.



Send us your vehicle model and we will check the seat mounting dimensions.

Application

Seating On-site

Truck Parts & Solution

COMPATIBLE VEHICLE MODELS



SUGGESTIONS

SUGGESTIONS

- CONFIRM VEHICLE COMPATIBILITY AND DIMENSIONS BEFORE INSTALLATION.
- ACTUAL FIT MAY VARY BY VEHICLE.
- CONTACT THE MANUFACTURER FOR FITMENT DETAILS.

INSTALLED VIEW

